JFW MODEL
115-044

IMPEDANCE
50 Ohms nominal

FREQUENCY RANGE
DC-6 GHz

VSWR
1.2:1 maximum
1.1:1 typical

Connector Body
Passivated Stainless Steel

Connector Pins
Gold plated

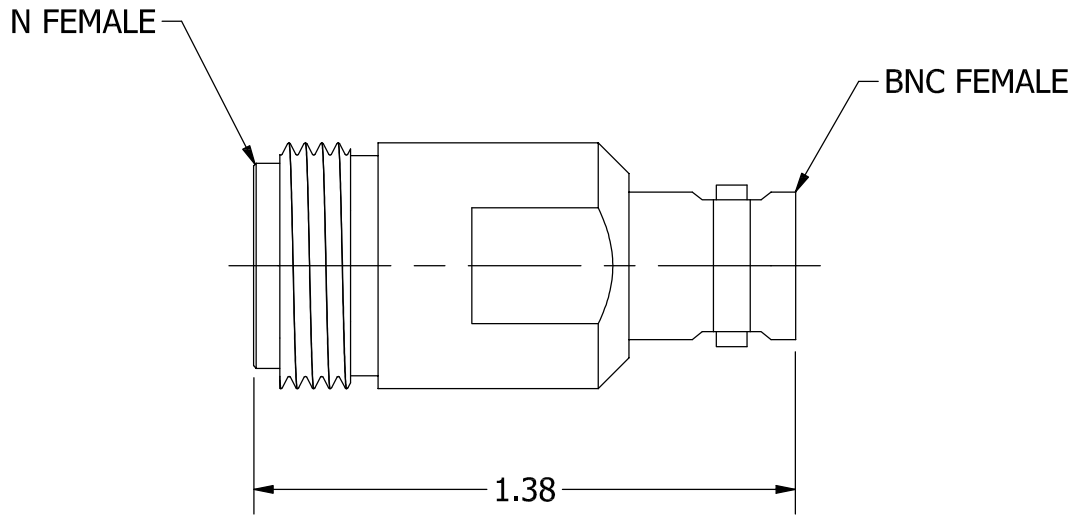

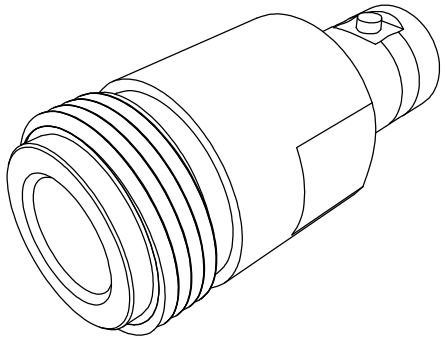

REV	ECN	DATE	BY	APPR
-	ISSUED	2-18-2025	JZ	TRS

JFW INDUSTRIES, INC.
www.jfwindustries.com PH: 317-887-1340

MATERIAL	STAINLESS STEEL		PROPRIETARY INFORMATION
FINISH	PASSIVATED		ALL SURFACES ARE TO BE FREE OF BURRS, PITS & SCRATCHES
MODEL	115-045	SCALE x2	TOLERANCES .XX±.010 .XXX±.005 XX°±.5°
DESCRIPTION	RF ADAPTER N FEMALE / BNC FEMALE		DWG # 115-045