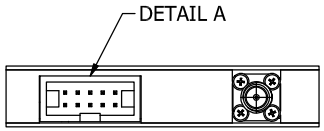

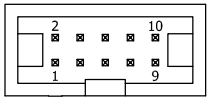

DETAIL A
3M #D2510-6002-AR
OR EQUIVALENT

PIN	FUNCTION
1	.25dB TTL CONT.
2	.5dB TTL CONT.
3	1dB TTL CONT.
4	2dB TTL CONT.
5	4dB TTL CONT.
6	8dB TTL CONT.
7	16dB TTL CONT.
8	32dB TTL CONT.
9	+5 Vdc
10	GROUND

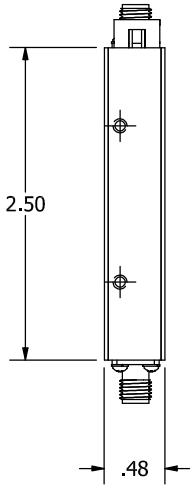

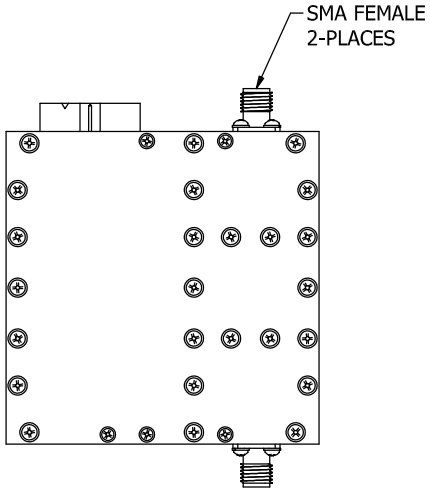

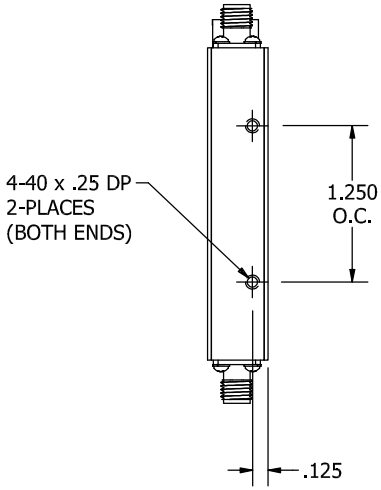

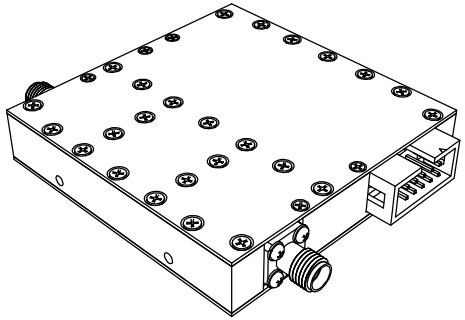

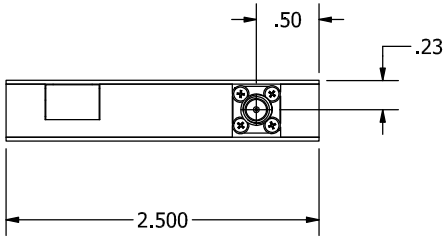

REV	ECN	DATE	BY	APPR
-	ISSUED	1-23-2024	GM	JZ

JFW INDUSTRIES, INC.

www.jfwindustries.com PH: 317-887-1340

MATERIAL	ALUMINUM ALLOY		PROPRIETARY INFORMATION
FINISH	ELECTROLESS NICKEL		ALL SURFACES ARE TO BE FREE OF BURRS, PITS & SCRATCHES
MODEL	50P-XXXX	SCALE FULL	TOLERANCES .XX±.010 .XXX±.005 XX°±.5°
DESCRIPTION	PROGRAMMABLE ATTENUATOR		DWG # 092-7425-10